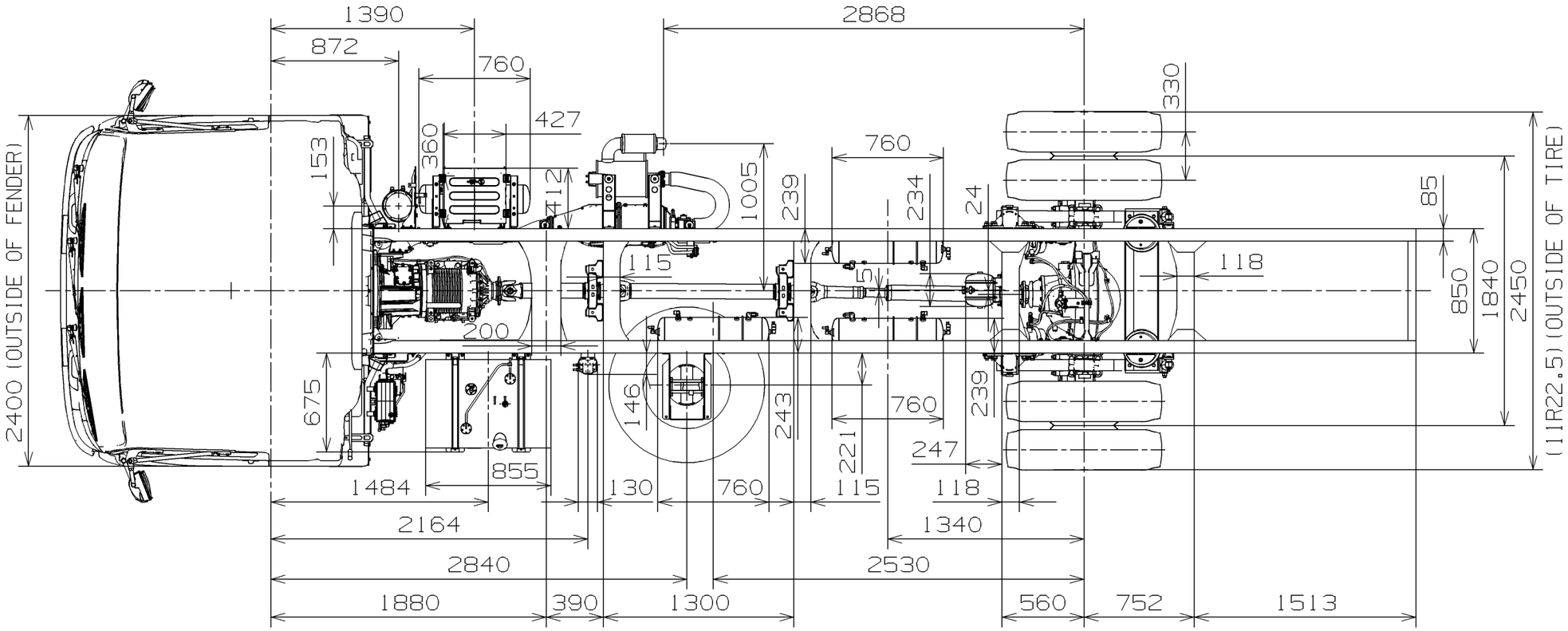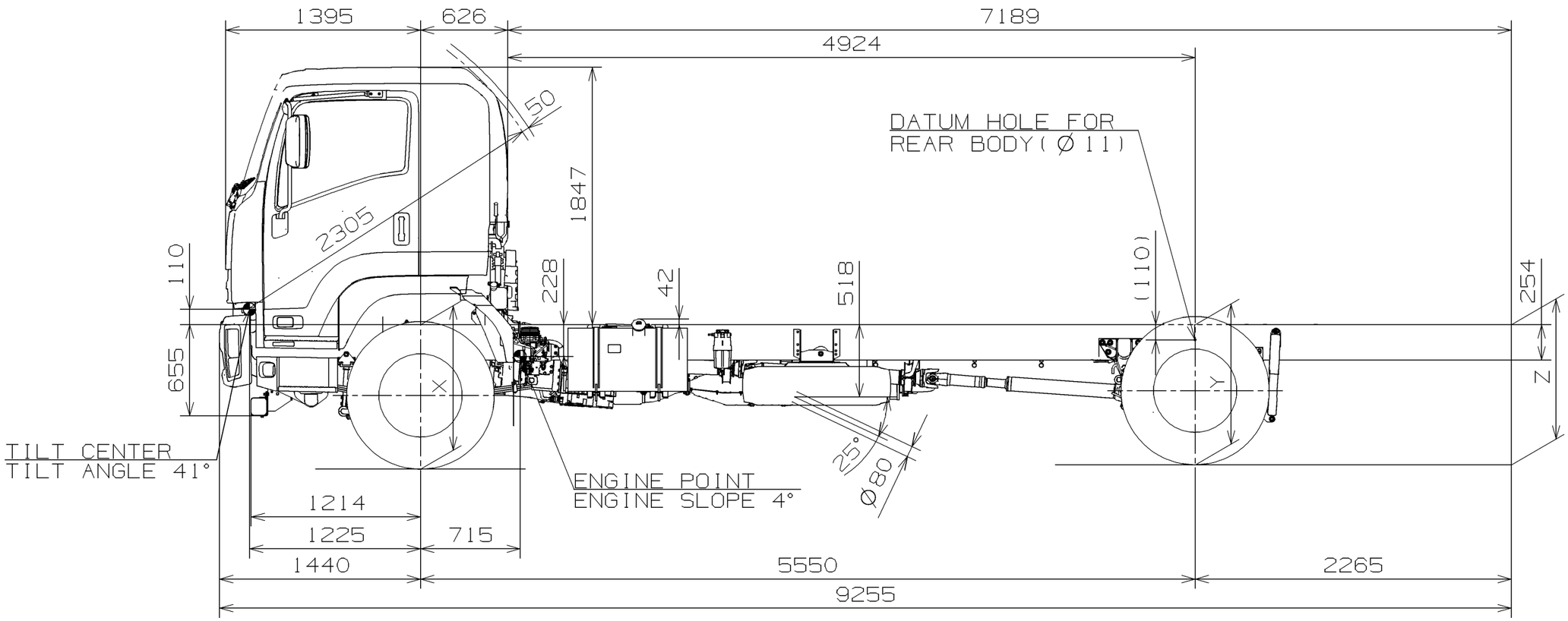FVR34VU-QDHS-P