FXZ77UU–NDSH

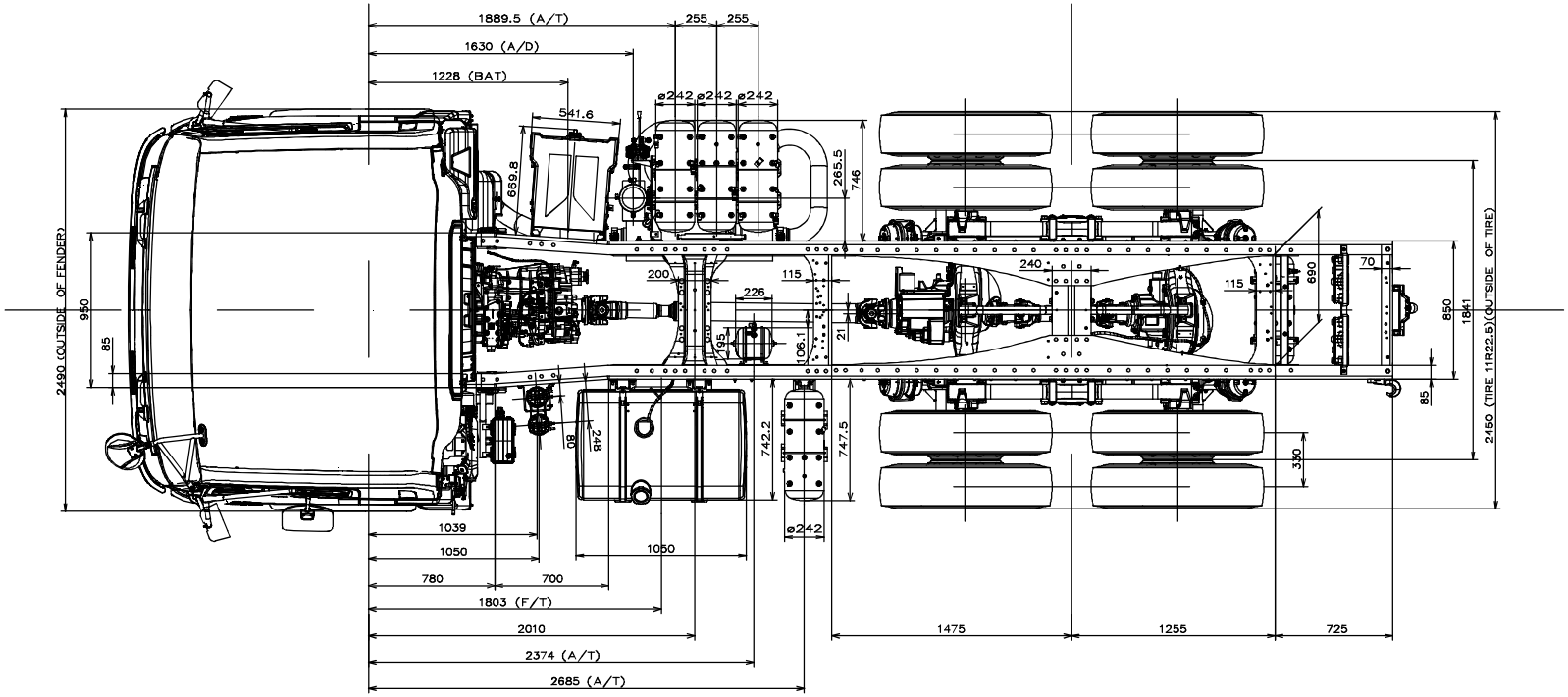

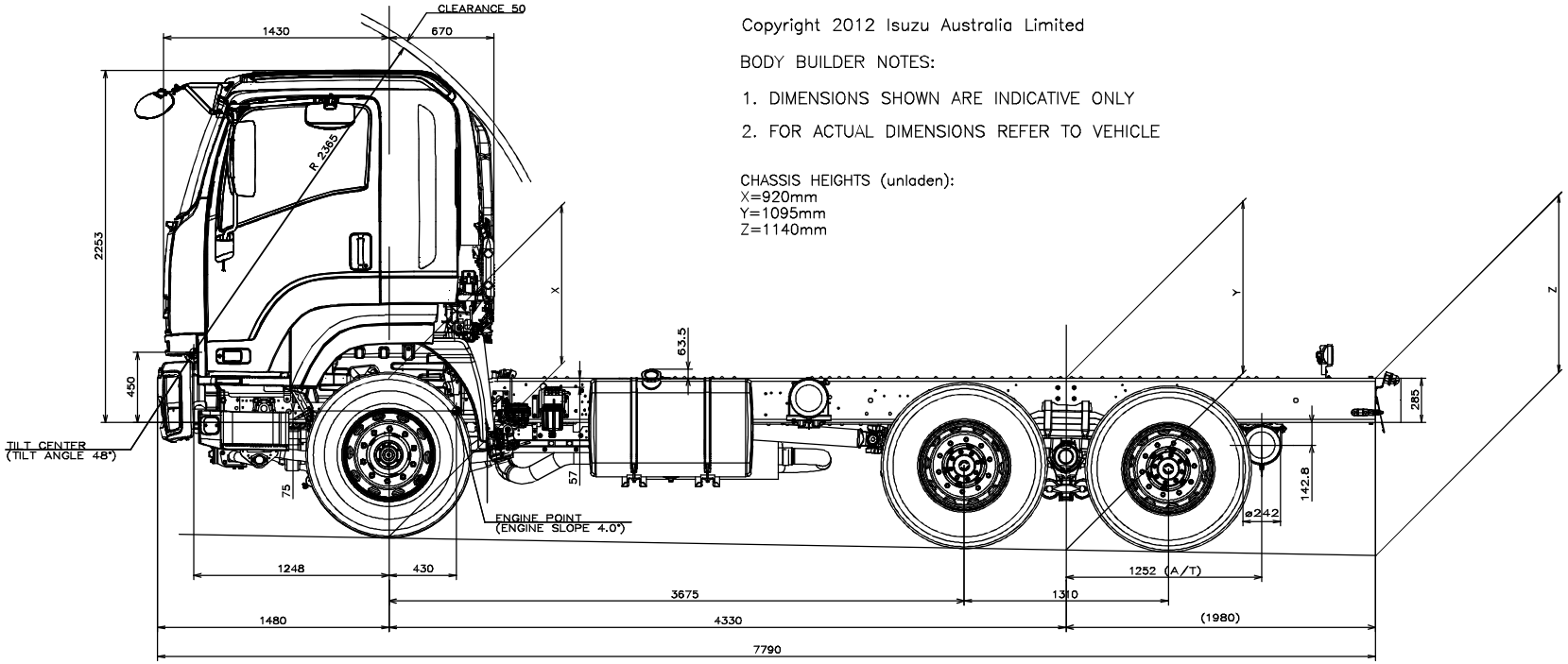

Copyright 2012 Isuzu Australia Limited

BODY BUILDER NOTES:

1. DIMENSIONS SHOWN ARE INDICATIVE ONLY
2. FOR ACTUAL DIMENSIONS REFER TO VEHICLE

CHASSIS HEIGHTS (unladen):
X=920mm
Y=1095mm
Z=1140mm

FH 2011MY Isuzu FXZ 1500 medium

Version 2, September 2012